SPECIFICATIONS

Size	Metric	British
Max. Working Height	20.15m	66ft 1in
Max. Platform Height	18.15m	59ft 6in
Max. Operating Range(+0.6m)	11.13m	36ft 6in
Max. Platform Range	10.53m	34ft 6in
Flatbed Transport Dimensions (L×W×H)	6.41m×2.44m×2.59m	21ft×8ft×8ft 6in
Standard Container Transport	All Applicable	All Applicable
Platform Size(Length×Width)	1.83m×0.79m	6ft×2ft 7in
Turntable Tailswing	0.65m	2ft 2in
Ground Clearance Ⓐ	0.31m	1ft
Wheelbase Ⓑ	2.40m	7ft 10in
Turning Radius(Inside/Outside)	3m/4.73m	9ft 10in/15ft 6in
Tyres	315/55 D20	315/55 D20
Max. Up And Over Clearance	8.18m	26ft 10in
Max. Down Probing Depth	1.25m	4ft 1in

Performance		
S.W.L	320kg	705lb
Max. Occupants	2	2
Gradeability	40%	40%
Travel Speed(Stowed)	6.0km/h	3.7mph
Travel Speed(Raised)	1.1km/h	0.7mph
Max. Working Slope	X-5°/Y-5°	X-5°/Y-5°
Turret Rotation	360°Continuous	360°Continuous
Platform Rotation	180°	180°
Jib Movement	132°	132°

Weight		
Overall Weight	8900kg	19621lb

Power		
Battery	48V/375Ah	48V/375Ah
Charger	48VDC/60A	48VDC/60A
Driving Motor	34AC/9kW	34AC/9kW
Lifting Motor	34VAC/13kW	34VAC/13kW
Hydraulic Tank	145L	38gal

ELECTRIC

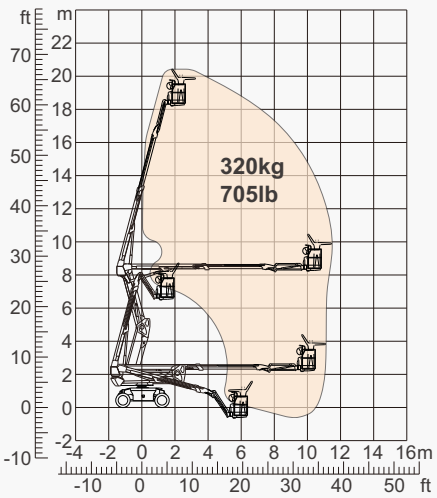

Range Of Motion

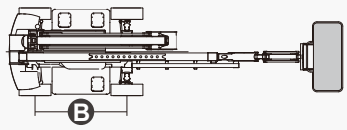

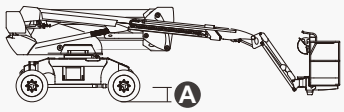

DINGLI
Exceed · New Height

BA20CERT2

Modular Boom Series

FEATURES

Standard Items

- 1.50m (4ft 11in) Jib
- Front Oscillating Axle
- Two-Wheel Steering
- Four-Wheel Drive
- Self-Leveling Platform
- 180° Left And Right Swing Platform
- Proportional Joystick Controls
- Thumb Rocker Steer
- Drive Enable
- Ac Power Cord To Platform
- Tilt Alarm
- Descent Alarm
- Flash
- Horn
- Hour Meter
- Integral Integrated Special Drive Axle For Construction Machinery
- 360° Continuous Turntable Rotation
- Positive Traction Four Wheel Drive
- Platform Load Sense System
- Fault Diagnosis System
- Operator Anti-crushing Protection System
- Harsh Environment Kits
- 12V DC Auxiliary Power
- Battery 375Ah/48V
- Driving Motor 9kW 4834rpm
- Lifting Motor 13kW 1855rpm

Articulated Boom-BA | Working Height-20m | Jib | Electric-E | Rough Terrain-RT

ZHEJIANG DINGLI MACHINERY CO., LTD.
Address: No.188 Qihang Road,Deqing,Zhejiang P.R.C 313219
Telephone: +86(572)8681688
E-Mail: export@cndingli.com
Https://en.cndingli.com

Due to continuous technology updates, technical parameters are subject to change without notice. This picture book is for reference only, the actual product shall prevail. The copyright is owned by zhejiang dingli, any content may not be copied for any purpose without written permission.
2023-07